REV.	DESCRIPTION	DATE

THESE DRAWINGS ARE THE PROPERTY OF Thermaltake CO.,LTD. AND CONTAINS CONFIDENTIAL AND TRADE SECRET INFORMATION.AND SHALL NOT BE REPRODUCED. COPIED OR USED IN ANY MANNER WITHOUT THE PRIOR WRITTER CONSENT OF Thermaltake CO.,LTD.

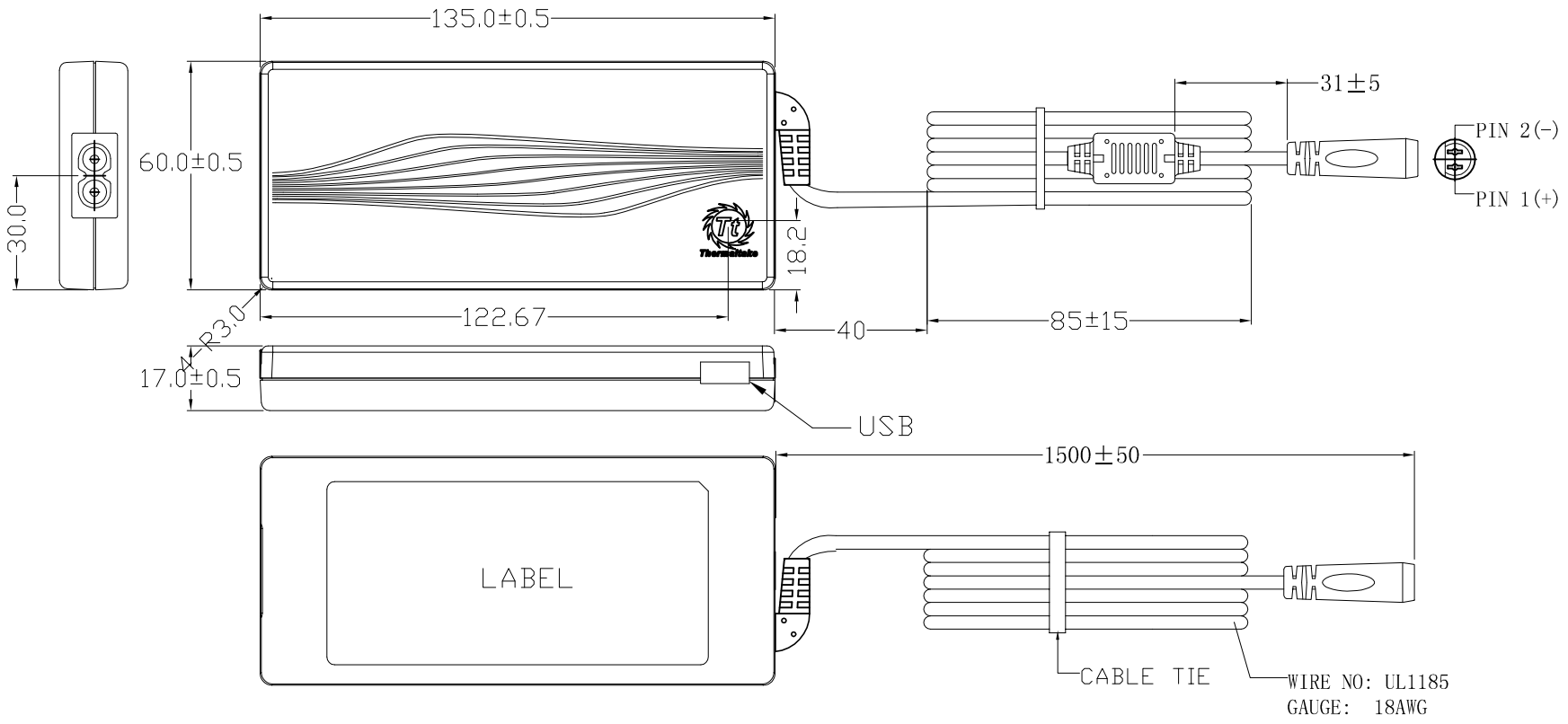

Note:
1.須符合S-TT-001 標準
2. CASE COLOR: BLACK
3. INLET: TECX SO-222-GF-015-SS7(d) OR EQU
4. 未注公差：±1
5. 超音波溶接

ITEM	PART NO.	DESCRIPTION	QTY

MATERIAL	透明PC945
FINISH	
COLOR	BLACK

TOLERANCES UNLESS NOTED	
0.0 ~ 5	± 0.1
5.0 ~ 20	± 0.2
20.0 ~ 50	± 0.3
50.0 ~ 200	± 0.4
200.0 ~	± 0.5
ANGLE	± 1°

REV.	A
WEIGHT	
SCALE	1:1
UNIT	mm
THIRD ANGLE PROJECTION	

Tt® Thermaltake Technology Co., Ltd

DRAWING NAME	slim type 90W adapter (19V)		
PART NO.	ADP90W0005		
DATE	APP.	CHK.	DRAW
2010/09/28			

7 6 5 4 3 2 1